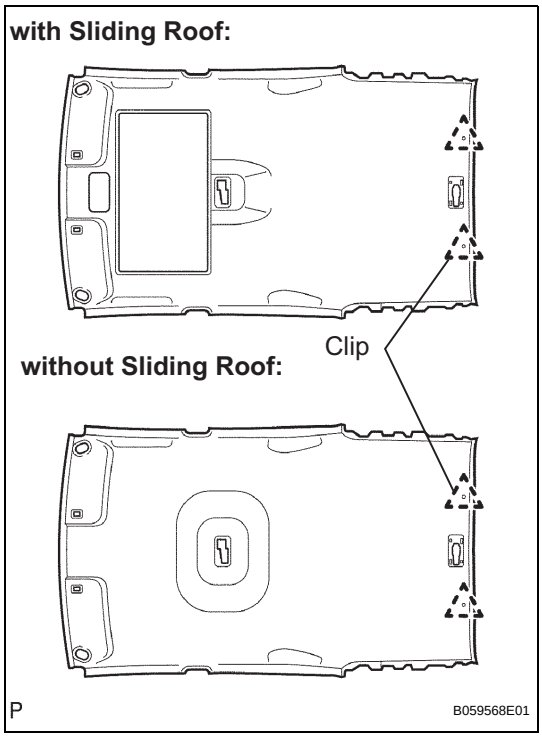

39. REMOVE ROOF HEADLINING ASSEMBLY
(a) Remove the 2 clips and roof headlining.
(b) Disconnect the wire harness.

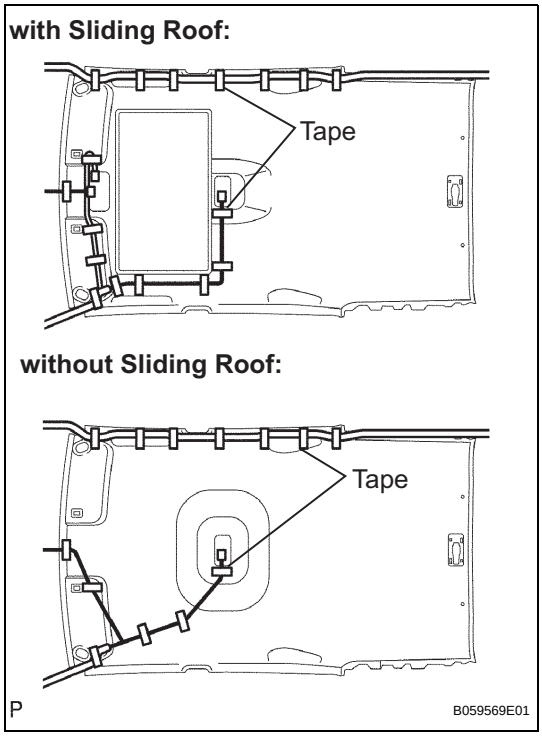

INSTALLATION

1. INSTALL ROOF HEADLINING ASSEMBLY
(a) Align the wire harness to the markings, and then attach the wire harness with tape.
HINT:
Be careful that dirt and foreign matter do not contaminate the tape's adhesive.
(b) Attach the roof wire harness with tape.
NOTICE:
Roof wire harness should be attached securely.
(c) Install the 2 clips.

2. INSTALL SUN ROOF OPENING TRIM MOULDING (w/ SLIDING ROOF)

3. INSTALL VISOR HOLDER

4. INSTALL ASSIST GRIP SUB-ASSEMBLY
(a) Install the 2 screws and assist grip.
(b) Install the 2 grip covers.

5. INSTALL NO. 1 INTERIOR LIGHT ASSEMBLY
(a) Install the interior light.
(b) Install the lens cover.

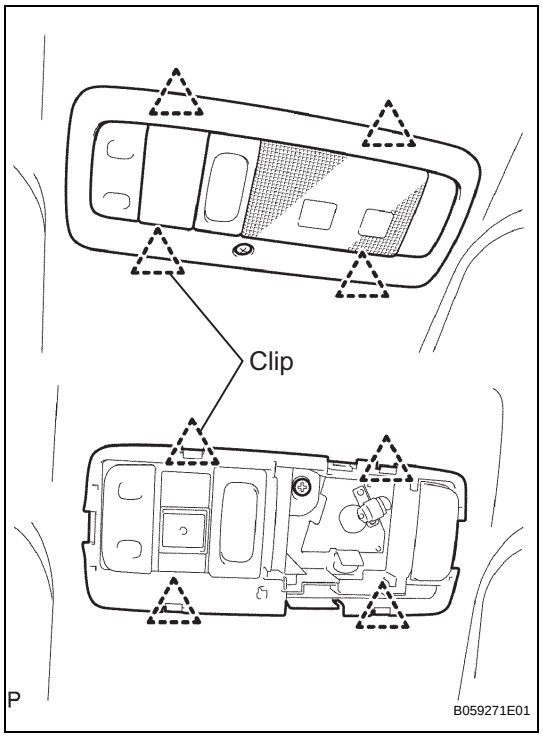

6. INSTALL MAP LIGHT ASSEMBLY
(a) Install the map light.
(b) Install the screw.
(c) Install the light lens and cover and engage the 4 clips.
(d) Install the screw.

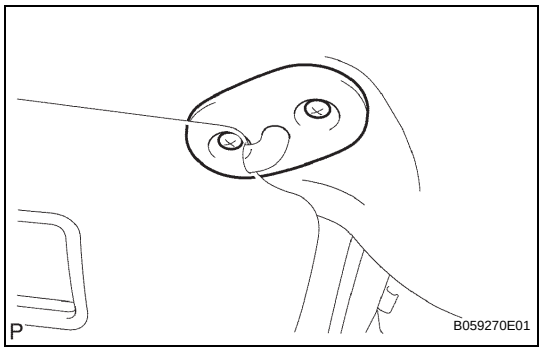

7. INSTALL VISOR ASSEMBLY LH
(a) Install the 2 screws and visor.

8. INSTALL VISOR ASSEMBLY RH
(a) Install the 2 screws and visor.

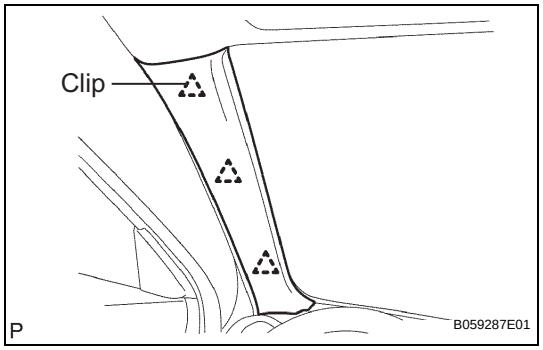

9. INSTALL FRONT PILLAR GARNISH LH
(a) Install the pillar garnish.

10. INSTALL FRONT PILLAR GARNISH RH

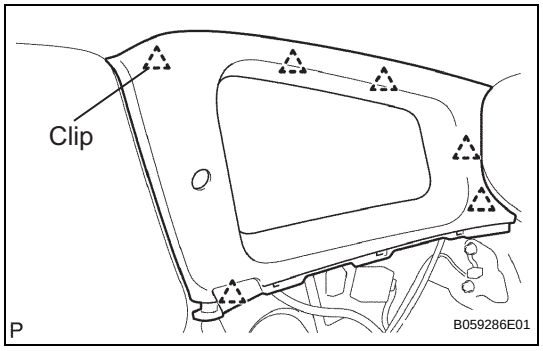

11. INSTALL ROOF SIDE INNER GARNISH LH
(a) Install the roof side garnish.
(b) Install the bolt and rear seat 3-point belt.
Torque: 41.2 N*m (420 kgf*cm, 30 ft.*lbf)
(c) Install the seat belt anchor cover.

12. INSTALL ROOF SIDE INNER GARNISH RH

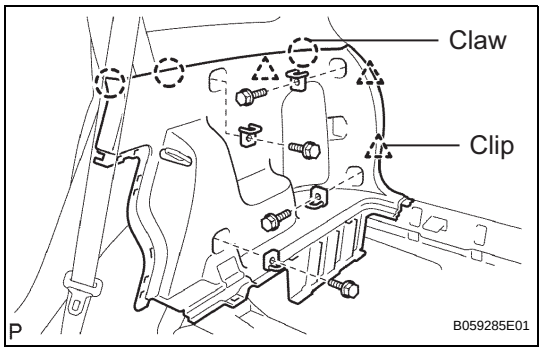

13. INSTALL DECK TRIM SIDE PANEL ASSEMBLY LH
(a) Install the side panel and engage the 3 claws and 3 clips.
(b) Install the 4 bolts and 4 rope hooks.

14. INSTALL DECK TRIM SIDE PANEL ASSEMBLY RH

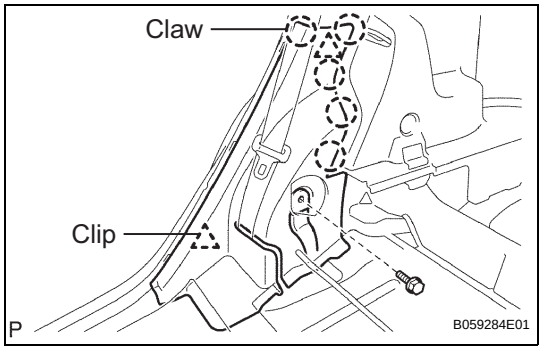

15. INSTALL REAR SEAT SIDE GARNISH LH
(a) Install the side garnish.
(b) Install the bolt and seat back hinges.
Torque: 18 N*m (185 kgf*cm, 13 ft.*lbf)

16. INSTALL REAR SEAT SIDE GARNISH RH

17. INSTALL REAR SEATBACK ASSEMBLY
HINT:
See page SE-19

18. INSTALL REAR SEAT CUSHION ASSEMBLY
HINT:
See page SE-19

19. INSTALL TONNEAU COVER ASSEMBLY

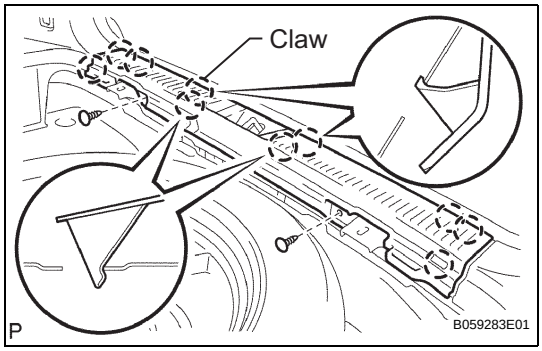

20. INSTALL REAR DECK TRIM COVER
(a) Install the rear deck trim cover.
(b) Install 2 clips.

21. INSTALL BACK DOOR WEATHERSTRIP

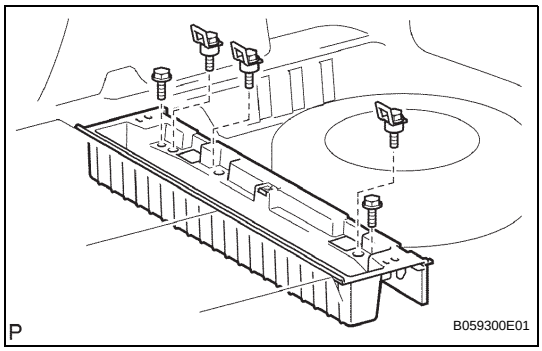

22. INSTALL LUGGAGE COMPARTMENT TRAY
(a) Install the 5 bolts and luggage compartment tray.

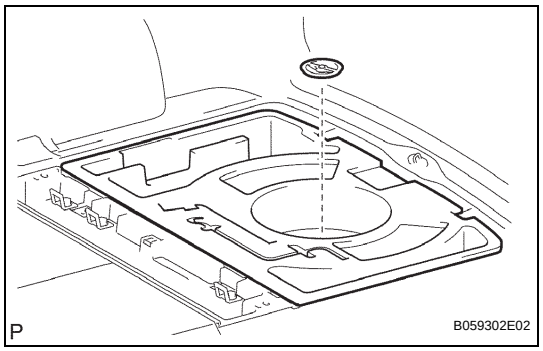

23. INSTALL REAR DECK FLOOR BOX
(a) Install the rear deck floor box and tighten the spare wheel carrier.

24. INSTALL DECK BOARD SUB-ASSEMBLY
(a) Install the 2 bolts and deck board.

25. INSTALL NO. 2 DECK BOARD

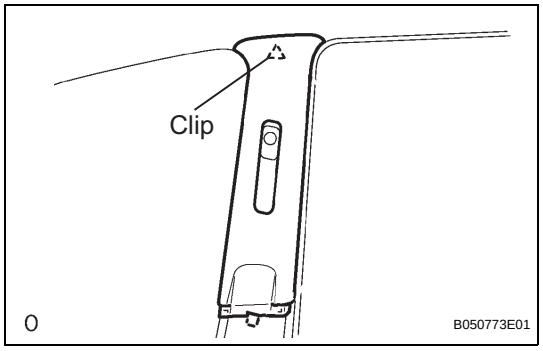

26. INSTALL CENTER PILLAR GARNISH LH
(a) Install the pillar garnish.
(b) Connect the front seat outer belt (floor anchor side) and install the bolt.
(c) Connect the front seat outer belt (shoulder anchor side) and install the bolt.
Torque: 41.2 N*m (420 kgf*cm, 30 ft.*lbf)
(d) Install the shoulder anchor cover cap.

27. INSTALL CENTER PILLAR GARNISH RH

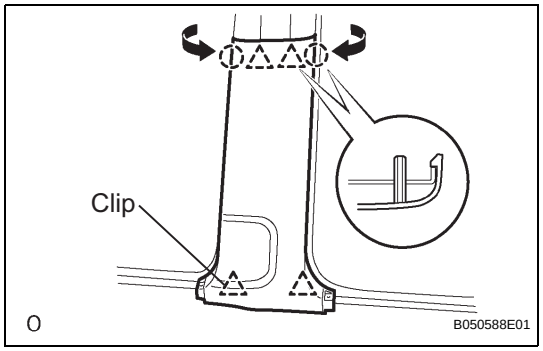

28. INSTALL CENTER PILLAR LOWER GARNISH LH
(a) Install the lower garnish.

29. INSTALL CENTER PILLAR LOWER GARNISH RH

30. INSTALL REAR DOOR OPENING TRIM LH

31. INSTALL REAR DOOR OPENING TRIM RH

32. INSTALL FRONT DOOR OPENING TRIM LH

33. INSTALL FRONT DOOR OPENING TRIM RH

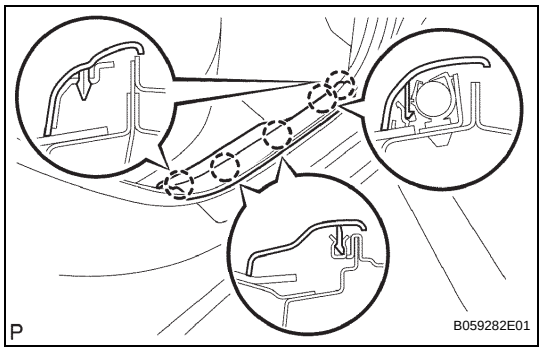

34. INSTALL REAR DOOR SCUFF PLATE LH
(a) Install the scuff plate.

35. INSTALL REAR DOOR SCUFF PLATE RH

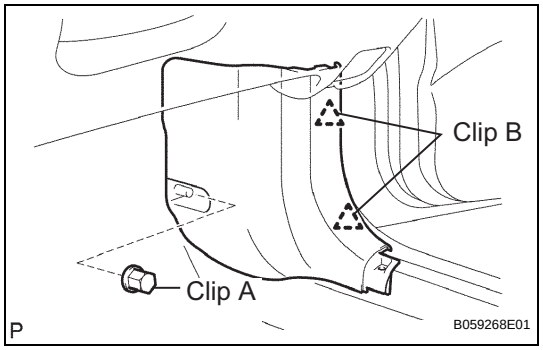

36. INSTALL COWL SIDE TRIM BOARD LH
(a) Install the trim board and engage the 2 clips labeled B.
(b) Install the clip labeled A.

37. INSTALL COWL SIDE TRIM BOARD RH

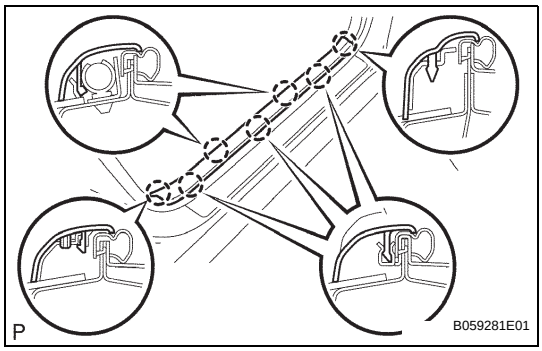

38. INSTALL FRONT DOOR SCUFF PLATE LH

(a) Install the scuff plate.

39. INSTALL FRONT DOOR SCUFF PLATE RH